Model NO	D-213-MATX-B126SA
Ext	5.25"x1
Hid	3.5"x 2
M/B	9.6"x9.6"
Fan	8.0CMx2(Option)
Slot	4 (Low Profile)
Rev	

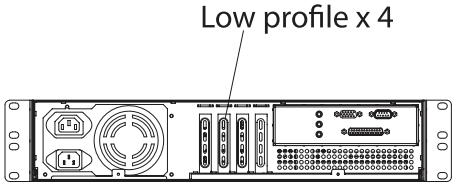

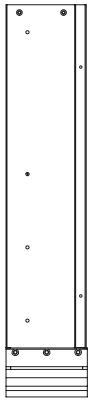

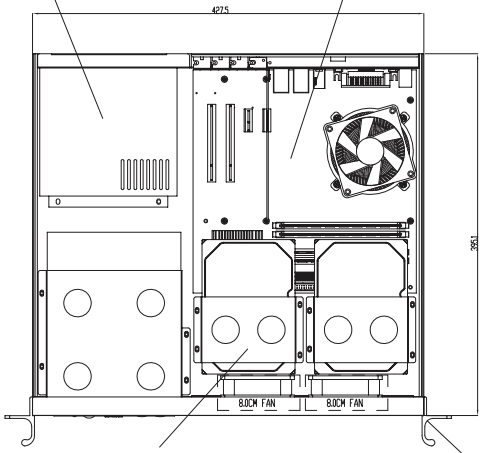

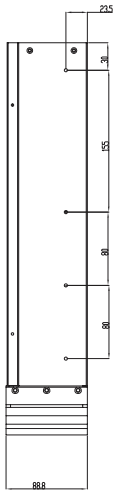

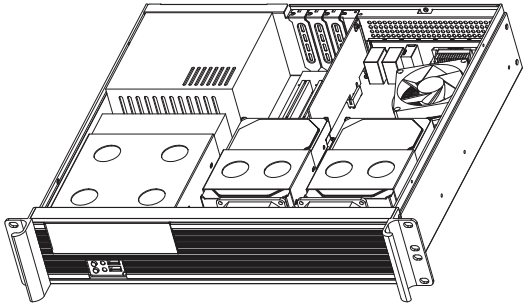

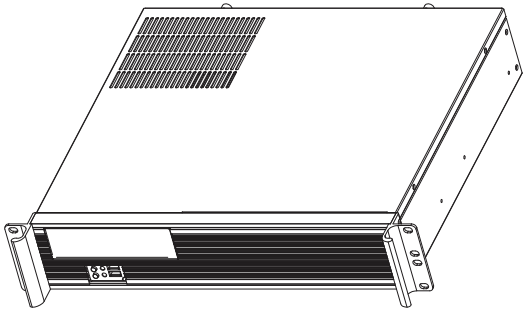

比例 1:2

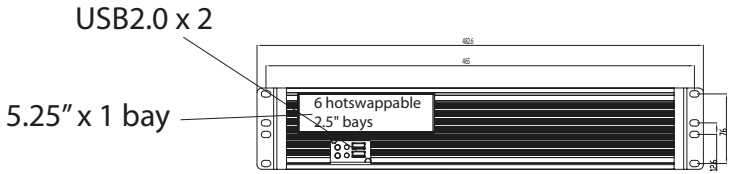

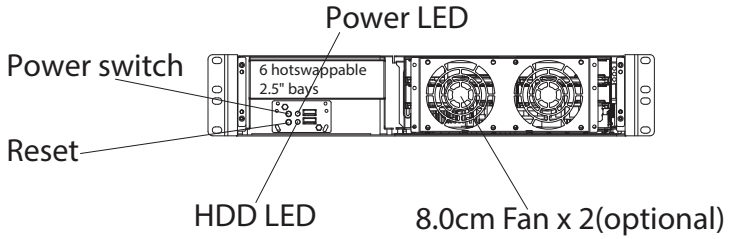

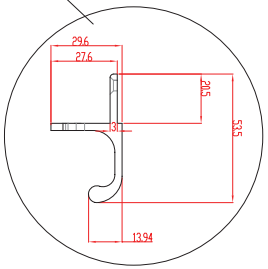

NOTE:

1. 材质要求环保（RoHS）;
2. 机箱外表面粉烤黑色。

MAT'L	SGCC T1.2									A0	MM				
FINISH	SEE NOTE			0~6	±0	±0	±0	±0	±0	SHEET	1 of 1				
DRAWN	—	13-06-20		6~30	±0	±0	±0	±0	±0	SCALE	1:2	QTY	1		
DESIGN	—	13-06-20		30~80	±0	±0	±0	±0	±0	DRAWING No.	—_				
CHECKED	—	—		80~180	±0	±0	±0	±0	1.0	TILE No.	—_				
APPROVED	—	—		180~315	±0	±0	±0	1.0	1.5	PART No.	—_				

2014/08/18