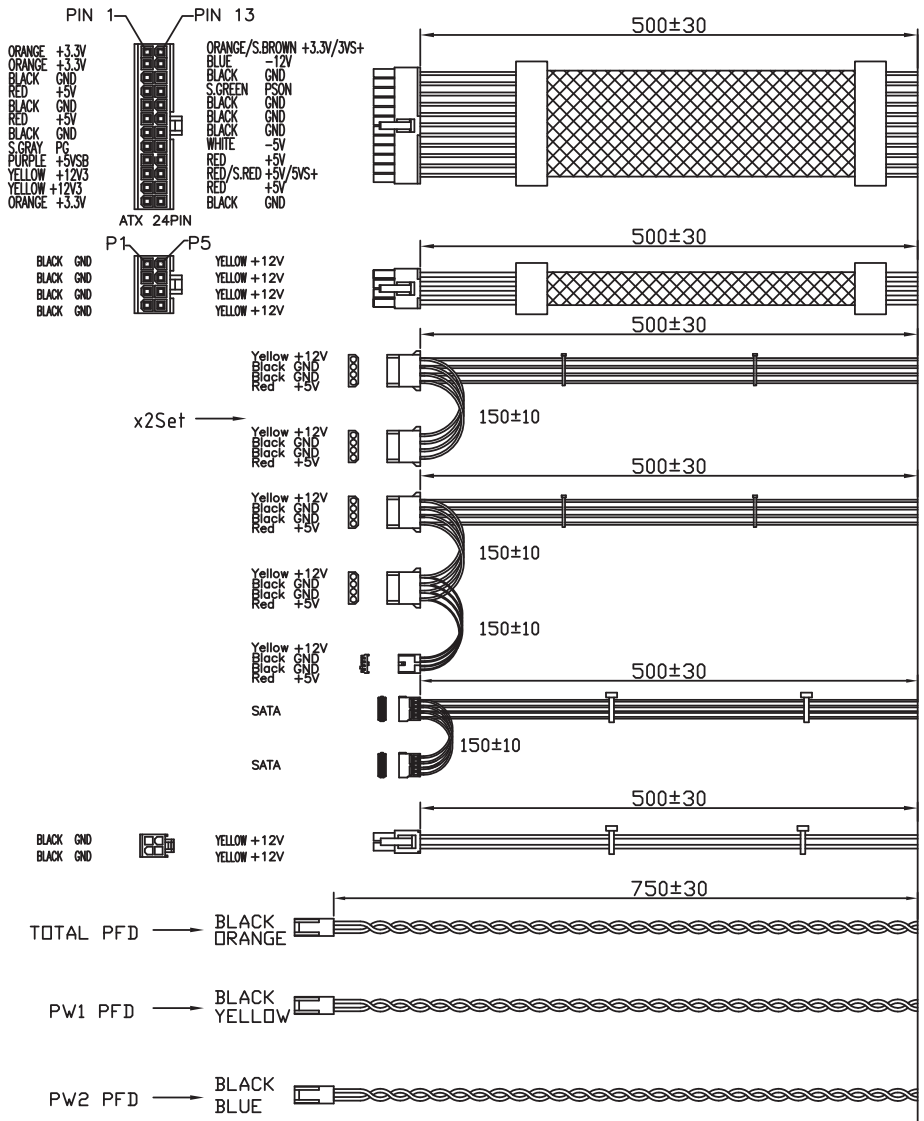

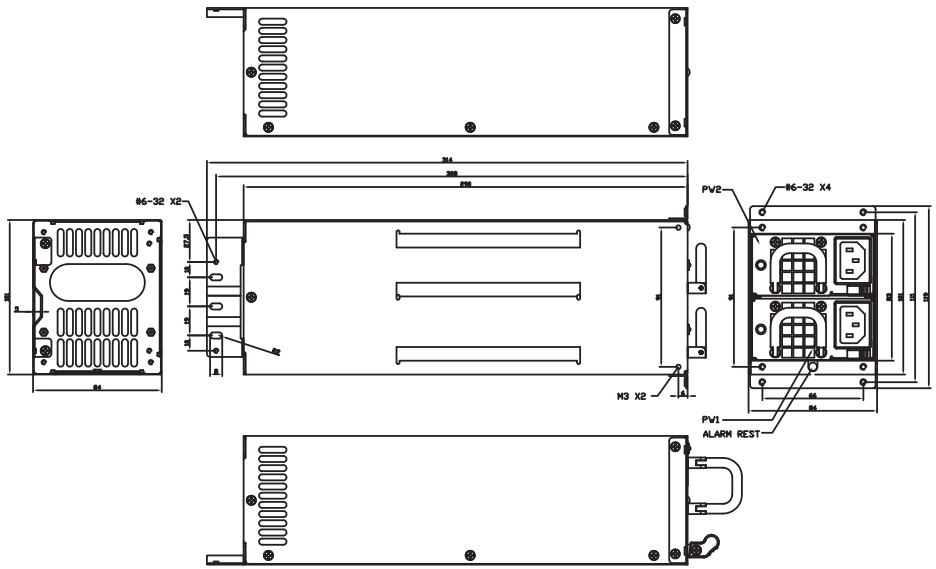

MODEL STD	NAME IS-400R2UP	XEAL™ Powered by iStarUSA® Group	
NOTES TOLERANCE TO BE FOLLOWINGS UNLESS OTHERWISE BE SPECIFIED: LENGTH: ALL — TOLERANCE: +5/-0mm	MATERIAL		
	FINISH	UNIT: mm	SCALE: 1/1
	PART NO.	SHEET: 1 OF 1	
	MANUFACTURE NUMBER	DRAWING NO.	