REV.	DESCRIPTION	LOCATION	ENG.	DATE

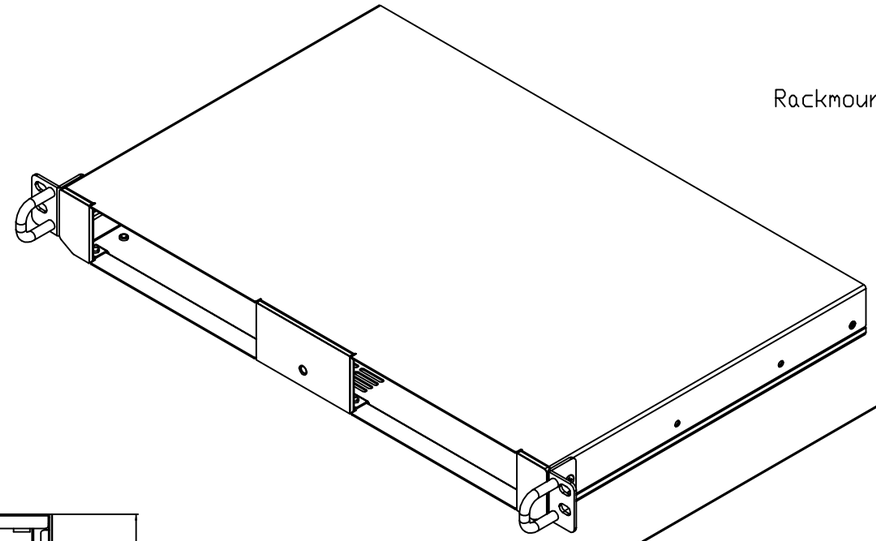

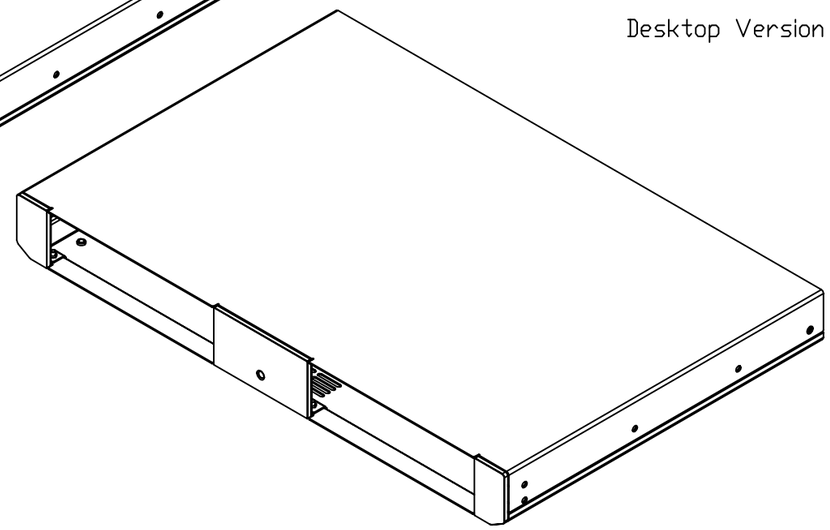

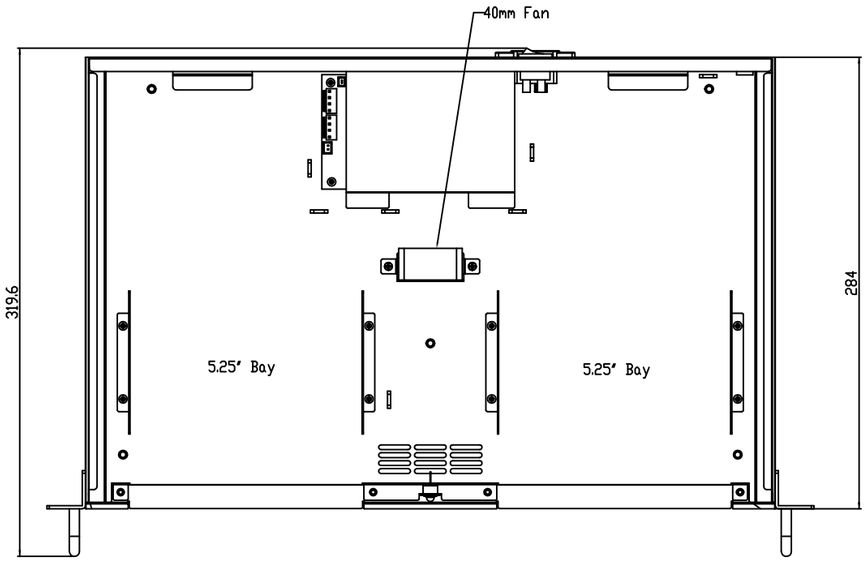

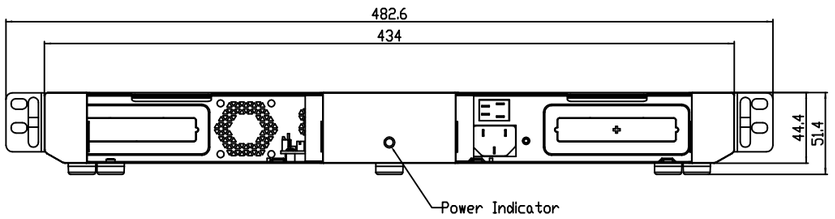

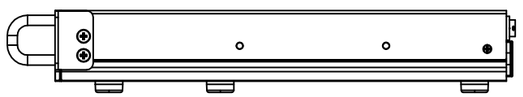

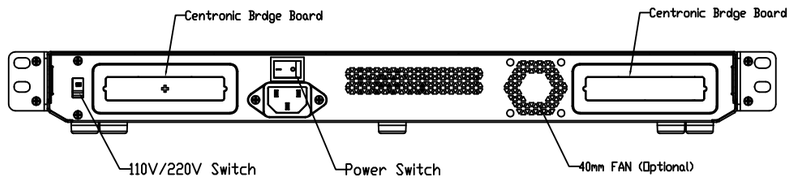

iStarUSA Powered by iStarUSA Group				MODEL NAME.	
GENERAL TOLERANCE:		PROJECT CODE		PART NO.	
DSN: Thierry	May-19-15	MATERIAL:		PART NAME	T-12
CHK:		FINISH:			
APPD:		SCALE: 1:1	UNIT: mm	SHEET: 3 OF 3	SIZE: A0 VER: