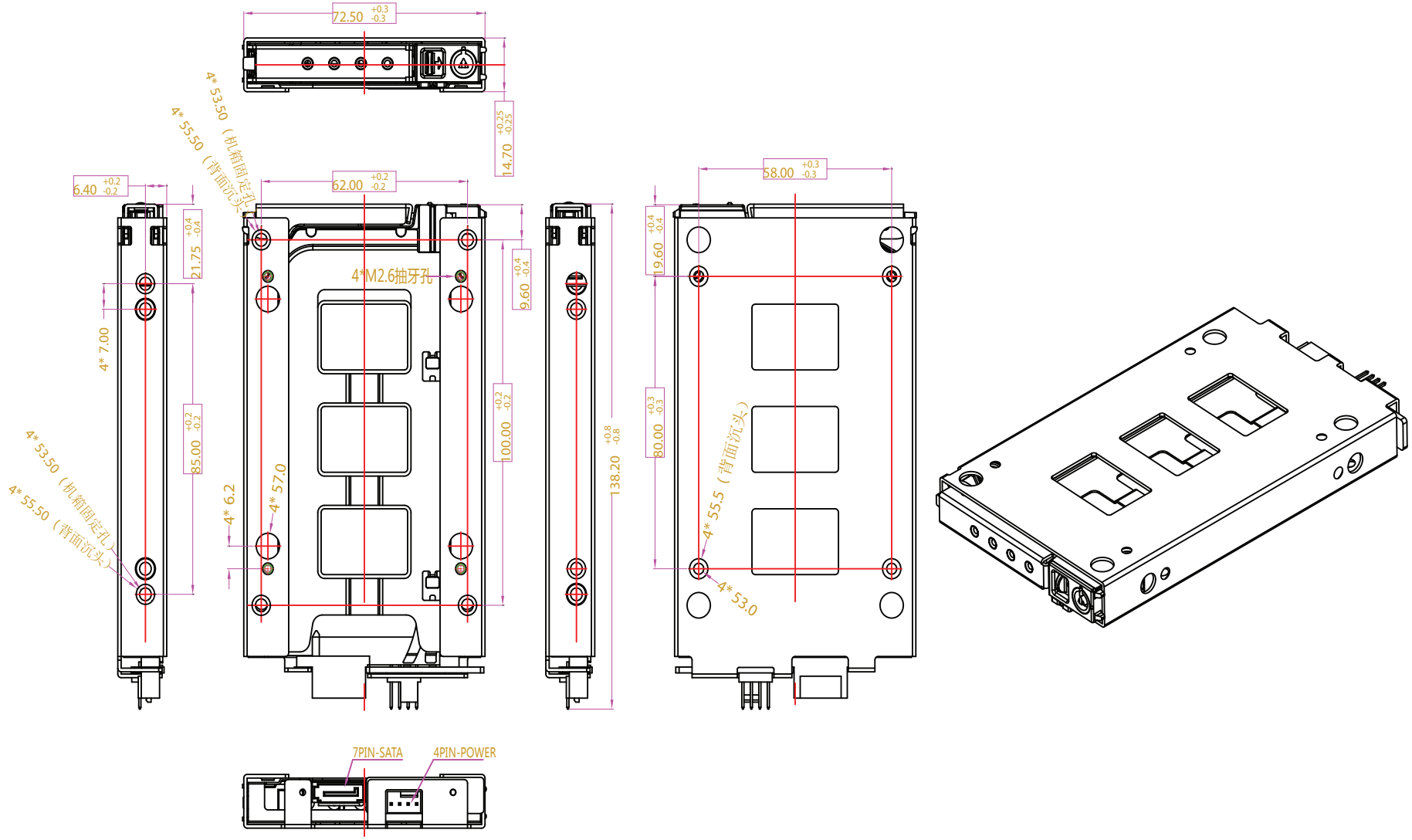

LTR	REVISION RECORD	ECR	ECN	DRG	CHK	DATE

GENERAL TOLERANCES	
.X:	±0.50
.XX:	±0.20
.XXX:	±0.10
X:	±2.0°
X.X:	±1.0°
X.XX:	±0.5°

SHEET 1 OF 1

APPROVED BY:		TITLE:	T-CE125-SS drawing
CHECKED BY:			
DRAWING BY:		PART NO:	T-CE125-SS
MATERIAL:			
SURFACE FINISH:		DWG NO:	
SIZE: A4	PROJECTION:	UNIT: MM	SCALE 1:2 REV: A0

Powered by iStarUSA Group